Int J Clin Exp Med 2017;10(4):6369-6377
www.ijcem.com /ISSN:1940-5901/IJCEM0045638

Original Article

Evaluation of dental implant fatigue performance under loading conditions in two kinds of physiological environment

Hongyi Fan[1], Xueqi Gan[2], Zhuoli Zhu[2]

[1]*Department of Biomechanics, Institute of Architecture and Environment, Sichuan University, Chengdu 610065, Sichuan, China;* [2]*State Key Laboratory of Oral Diseases, West China Hospital of Stomatology, Sichuan University Chengdu 610065, Sichuan, China*

Received July 12, 2016; Accepted March 12, 2017; Epub April 15, 2017; Published April 30, 2017

Abstract: Aim: To investigate the effect of diameter on the mechanical properties and load fatigue testing of wide, regular, and narrow dental implants in two different environment. Materials and methods: Three groups of different diameters implants were tested under simulated physiological environment conditions using cyclic compression and static loading. In the cyclic test, the load versus the number of cycles was plotted during the biomechanical analysis of each implant. A rotational load fatigue instrument was used to apply a load at a rate of 0.05 mm/sand an angle of 30 degrees to the long axis of the specimens. The samples were loaded until fracture occurred or an upper cyclic limit set to a maximum of 5×10^6 cycles was reached. Tukey's test was used for statistical analysis. Results: Load/displacement curves demonstrated different fatigue behavior with different implant diameters in each group of samples in simulated oral condition and normal condition. The fatigue limit under normal conditions was 13% greater than that in the simulated oral environment, the 3.3 mm group showed weaker performance fatigue behavior than other two groups implant. The 3.75 mm group showed better performance than the 5 mm group with a higher normalized load, however under absolute load magnitudes, the 5 mm group exhibited better performance than the 3.75 mm group. Conclusion: The results emphasize that the diameter of implants could substantially impact their ability to withstand loading, with a wider diameter demonstrating superior load fatigue performance. The narrow group showed typical fatigue behavior, indicating a risk of fracture in clinical practice that might be attributable to the implant design.

Keywords: Dental implants, fatigue test, fractures, S-N curve, cycles

Introduction

Dental implants have been widely used in completely or partially edentulous mouth for several decades to improve the dental function of patients. The success of dental implants itself were concerned, Factors such as implant design, surface coatings, and the manufacturing process can influence the percent of success of implants [1-6]. And recently researches were also found the oral environment and the actual procedure may related to the success of implants as important as the factors upon.

However, many typical cases of dental implant failure have been reported in clinical treatment [7]. In these cases, the risk factors for dental implant failure due to fracture include the type of the prosthesis involved, the implant diameter, and occlusal parafunction [8]. Several studies have revealed the nature and cause of implant fractures. When surfaces that were fractured after oral osseointegration were compared to experimental fractures produced by overload in the laboratory, it was found that implant fracturing due to fatigue was aggravated by bone resorption under physiological load [9, 10].

Different diameter implants have been used in clinical practice. Dental implants with diameters ranging from 3 mm to 3.4 mm are classified as small diameter, the regular one implants commonly used in clinics have diameters rang-

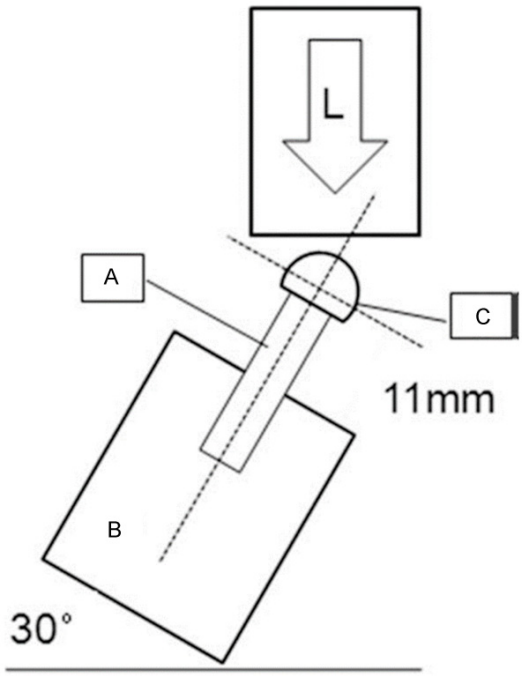

Figure 1. Schematic diagram of the implant loading device. A: Dental implant body; B: Specimen holder; C: Hemispherical loading member.

ing from 3.75 mm to 4.8 mm, and wide implants have diameters >5 mm. However, few reports have compared the success rate between different diameters. Recently, researchers found that the failure rate was related to the diameter of the dental implant. The 5 mm diameter dental implants revealed the highest failure rate among the classified categories of dental implants [11].

One report demonstrated that the success rate of small diameter implants for up to 5 years was over 89% [12]. A direct influence of implant diameter on fracturing was discovered due to fractures of osseointegrated dental implants resulting from low resistance to fatigue, a direct influence occurred of fractures by the implant diameter on fracturing was discovered. However, these reports also include the implant fracture incidence. The fracture status was found to be related to the duration of the implant process. Which probably leads to the observed results. However, these studies only focused on fractures due to fatigue strength under normal conditions in the laboratory [13, 14]. Less complex reactions were previously considered. The environment in the body is a more corrosive environment than normal laboratory conditions; thus, the intraoral environment may promote crack initiation due to the formation of corrosion pits and decreased fatigue life [15].

Simultaneously, little in vitro environmental research has been conducted to determine the biomechanical performance of different implant structures. Static and cyclic loading tests have been used in several studies. Despite the environment and the implant diameter, static loading tests have little clinical value because the failure mechanism is related to the application of repeated loads [16, 17]. Thus, the aims of this study were to evaluate fatigue fracturing under a simulated body environment and to investigate the factors governing implant fatigue strength by observing the fracture mode and comparing the fatigue performance of three different diameter implant structures through construction of S-N curves.

Materials and methods

Three types of commercial implants were tested in this study. All of the specimens were selected with a titanium-alloy threaded body and an external-hex connection design. The implants were consisted of 10 mm long with an outer diameter of 3.3 mm, 3.75 mm, and 5 mm. All the components were received in their original packaging. The components were tightened to 35 Ncm with a clinical torque driver. Each of the three groups included four implant specimens. A hollow iron holder with an outer diameter of 15 mm, length of 22 mm, and inner diameter of 12 mm was used for this study. Then, the holder was filled with epoxy resin. In the central concentric of the epoxy resin implant holder, three holes were drilled into the resin (3.3 mm diameter hole, 3.75 mm diameter hole, and a 5 mm in diameter hole). Each specimen was embedded into the resin. This procedure ensured that all the specimens were placed concentrically with a standardized embedment depth.

A force of 20 Ncm was applied between the fixture and the abutment screws with a digital torque wrench are commended by the manufacturer. A high strength holder was made from a longitudinal slotted steel cylinder steel to tightly fix the test implants to the testing equipment and apply the load. The implant specimens were locked into the epoxy resin up to the second thread. Before the testing, the holding

Table 1. Static test of various diameter implants in Quasi-Static test

Implant diameter (mm)	Number	Load range to deformation		Mean load (± SD)	
		Normal	Fluid	Normal	Fluid
3.30	8	510-564N	428-522N	537N (±12N)^{aA}	460 (±15N)^{cB}
3.75	8	578-662N	501-615N	621N (±20N)^{bA}	548 (±24N)^{aB}
5.00	8	740-855N	708-814N	796N (±32N)^{cA}	761 (±30N)^{bB}

Mean values followed by different uppercase letters in the same line indicate differences for storage media; Mean values followed by different lowercase letters in the same column indicate differences for implant diameters. The difference in mean load of 3.3 mm and 3.75 mm diameter implants was significant (P=0.039). The *P* value of the compressive strengths of different conditions with the same diameter between 3.3 mm and 3.75 mm (P=0.002). Furthermore, for all other design comparisons, the difference were also found to be significant (P<0.05).

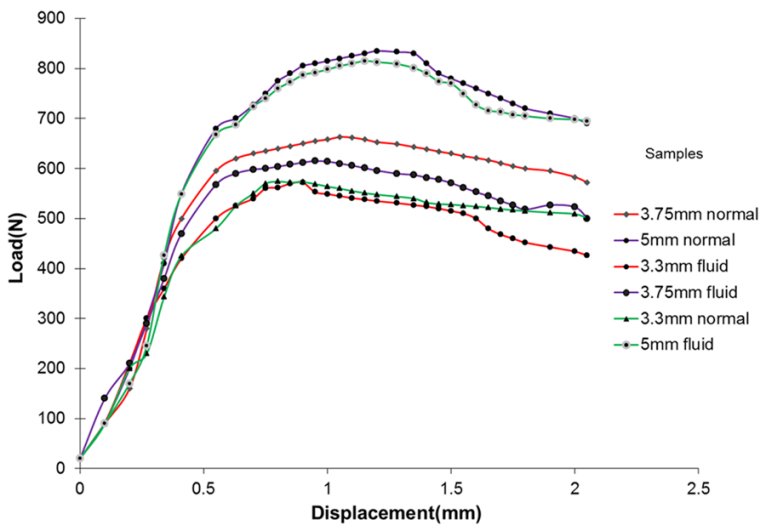

Figure 2. Load-displacement curves of static tests.

device was subjected to mechanical testing with an MTS load frame (858 MiniBionix Axial Torsional Test System, MTS System, Minneapolis, MN, USA) with a 250 kN load capacity. The loading method and specimen installation process were conducted as shown in **Figure 1**. All loading process were driven under load control, and the specimen holder was fixed to a clamp at an angle of 30 degrees. In addition, the implants were 30 degrees off-axis to produce a clinically relevant bending force. The quasi-static bending strength was tested prior to cyclic tests; the vertical load was applied at a rate of 0.05 mm/s until the specimen exhibited a fracture or plastic deformation.

The loading parameters were determined according to standards that included the relevant frequencies, temperature, and waveform in cyclic assessments. The minimum to maximum loading ratio was set to R=0.1. The cyclic test was interrupted when the implants were exhibited apparent failure. In order to minimize vibration of the instrument during testing, the applied cyclic load had a sinusoidal force with a frequency of 15 Hz at room temperature (20±5°) under normal conditions. In the simulated physiological environment, fatigue testing was conducted with a sinusoidal force with a frequency of 2 Hz in a liquefied condition.

The process of fatigue testing was generally applied in a simulated oral environment to reveal the period of implant fatigue life under the process. In this study, normal saline with 0.9% NaCl was used as artificial body fluid to simulate the implant being immersed in blood and saliva. Although some researchers prepare solutions that include KCl, $CaCl_2$ and $NaHCO_3$, Na^+ and Cl^- are the main ions that cause corrosion related to fracture of the passive film [18]. Specimens come into contact with extra-cellular fluids; thus, a 0.9% NaCl solution was chosen to simulate artificial body fluid.

All of the specimens test results were recorded during fatigue testing. The data were statistically analyzed using SPSS 19.0 (SPSS Inc., Chicago, IL, USA). Student's t tests and one-way ANOVA with Tukey's multiple comparison were performed to evaluate statistically significant differences between the sample groups. The differences were considered to be significant when *p* values were <0.05.

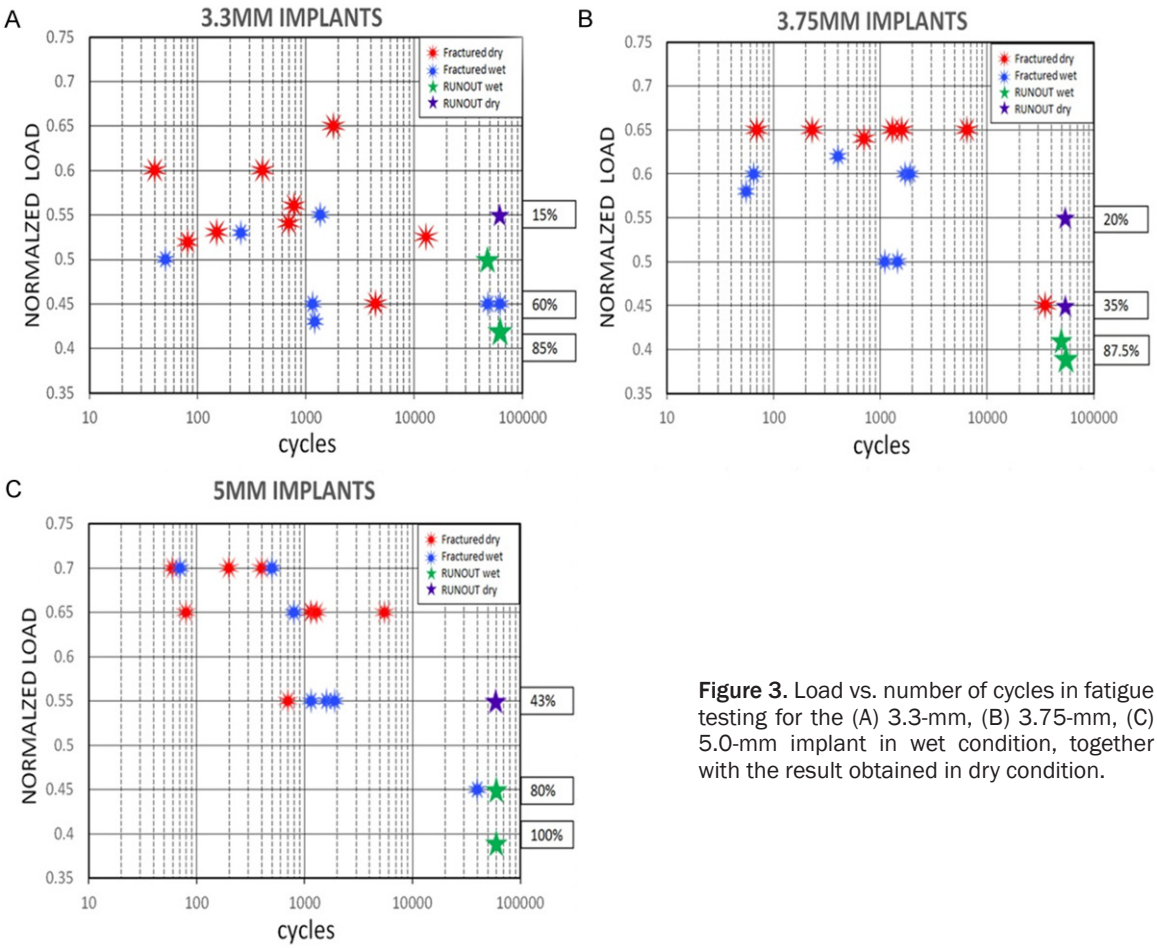

Figure 3. Load vs. number of cycles in fatigue testing for the (A) 3.3-mm, (B) 3.75-mm, (C) 5.0-mm implant in wet condition, together with the result obtained in dry condition.

Results

The mean values of static test results of all of the specimens under normal conditions and in a simulated physiological environment are summarized in **Table 1**. The failure mode of static testing was defined as the loading deformation that showed the highest load point for each tested implant.

Figure 2 shows the typical load/displacement curves demonstrating elastic displacement up to a point approximating the maximum sustained load. After achieving the maximum load value, following further application of load, the load value was found to decline, the curves of each test sample continued in a failure phase. Under the simulated body environment the values was lower than the normal condition for all the groups of the samples.

From the graphic, the test value was determined by continuously increasing the load in 15% increments starting from a load of 510 N until the fatigue limit was reached. However, in the simulated oral environment, the fatigue test results showed a fatigue limit that appeared at approximately 785 N and also survived 5×10^6 load cycles without failure. When the two conditions of the fatigue test were compared, the fatigue limit under normal conditions was 13% greater than that in the simulated oral environment.

Figure 3A-C shows the S-N curves obtained for each implant diameter group. In the S-N curves for the three different implant diameters, normal conditions (same meaning as dry in **Figure 3A-C**) resulted in longer fatigue life than the simulated oral environment (same meaning as wet in **Figure 3A-C**) ($P<0.05$).

From the S-N curve results for the three implant diameters show significant differences. In the 3.75 mm diameter implant S-N curve, the normalized load decreased as the mean number

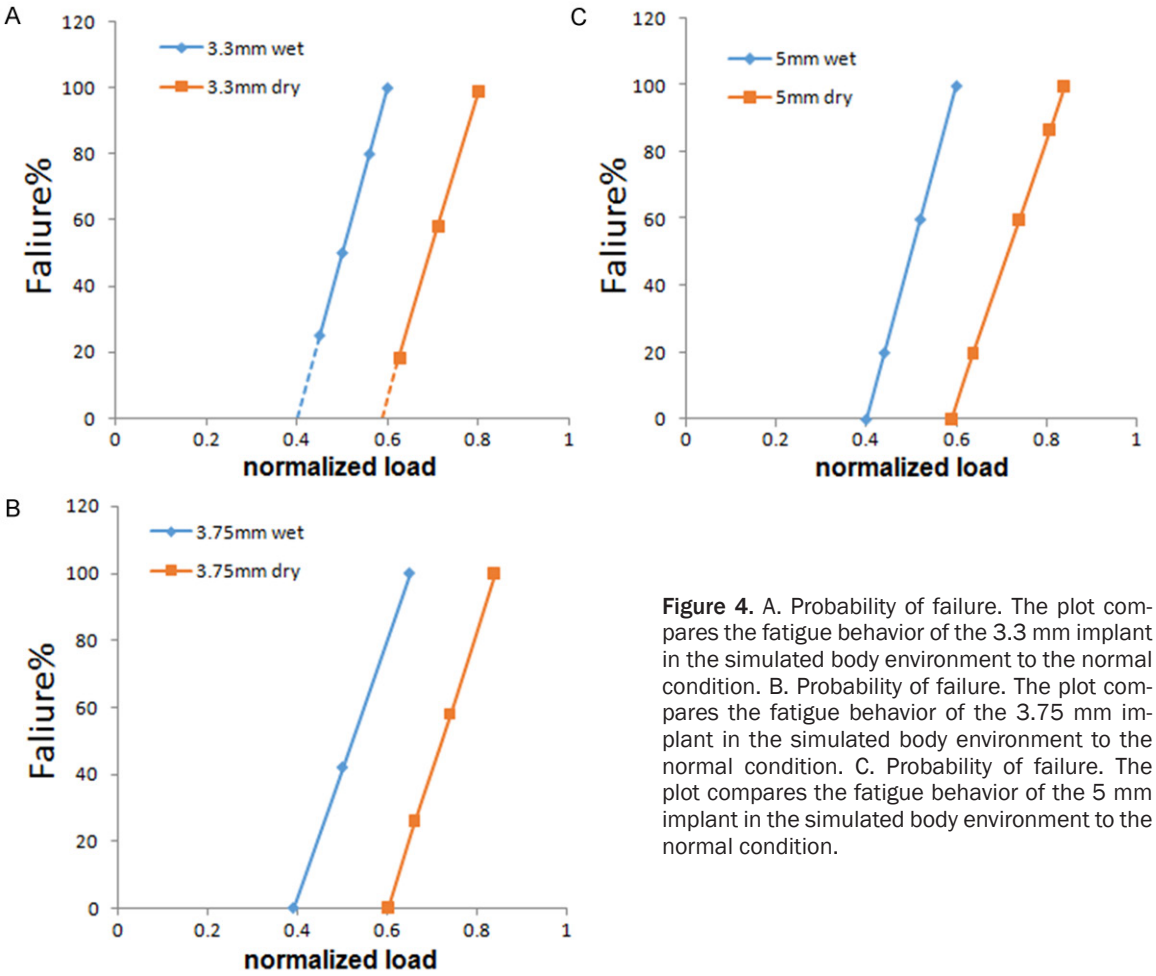

Figure 4. A. Probability of failure. The plot compares the fatigue behavior of the 3.3 mm implant in the simulated body environment to the normal condition. B. Probability of failure. The plot compares the fatigue behavior of the 3.75 mm implant in the simulated body environment to the normal condition. C. Probability of failure. The plot compares the fatigue behavior of the 5 mm implant in the simulated body environment to the normal condition.

of cycles to failure increased. The probability of survival increased as the normalized load decreased. In the 5 mm diameter implant S-N curve, the normalized load decreased as the average number of cycles to failure increased. However, in contrast, the S-N curve of the 3.3 mm diameter implant, which had a different probability of survival than the other two implants, did not increase monotonically as the normalized load decreased.

The graphic description of the overall 3.3 mm, 3.75 mm and 5 mm fatigue performance, comparing the normal condition between the simulated body environment. It can be seen the fatigue behavior of all group implant are similar between different diameter, but under the wet environment, the three groups of implant present weaker performance at a higher normalized load.

Figure 4A-C plots the probability of fail in fracture, at each load for the two kinds of environments. It is obviously to find that the two corresponding lines have relatively similar slope; however, the right side line is skewed to the left, which indicates the simulated body wet conditions would reduce the applicable load at a given percentage of survival by a constant normalized load.

Figure 5A-D show the typical micro-photographs of fractures surfaces of implant fractures in two kinds of environment. It can be seen that the surfaces of implants were broken at similar load level. However, the fatigue striations in simulated body environment showed transgranular fracture with secondary cracking, not found in normal environment instead.

Discussion

The service life of an implant is a major concern for clinicians. Due to technological innovations, implant life expectancy has increased, but clinical oral implants can still break due to fatigue

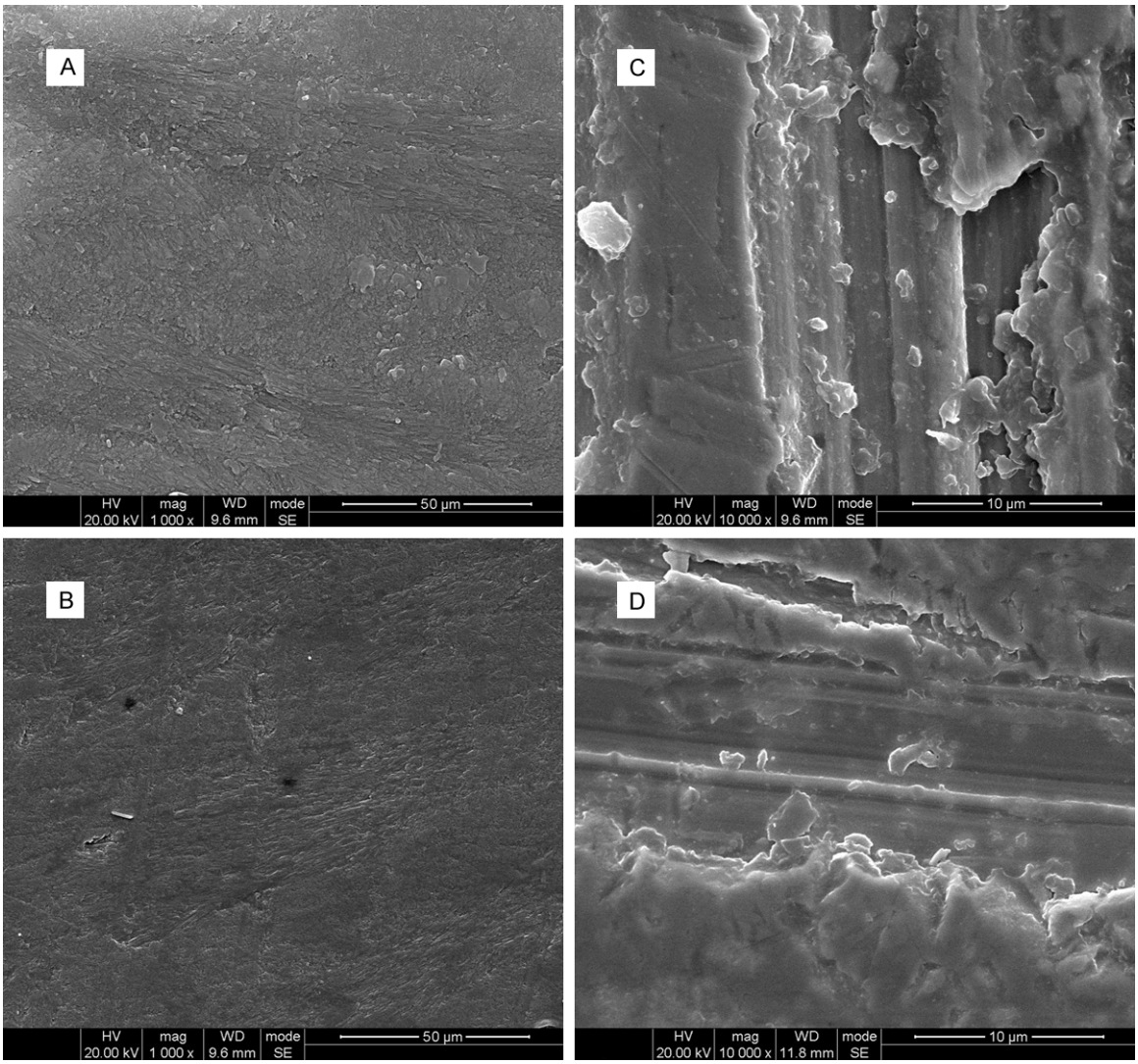

Figure 5. A. Fracture surface of implant fractured in simulated body environment with low magnificent. B. Fracture surface of implant fractured in normal environment with low magnificent. C. Fracture surface of implant fractured in simulated body environment with high magnificent. D. Fracture surface of implant fractured in normal environment with high magnificent.

and the effects of bite force [19, 20]. In this study, can be found that the fatigue lives of implants that were between 5 mm and 3.75 mm in diameter were similar under both normal conditions and the simulated oral environment. However, the 3.3 mm diameter implant did not show typical fatigue resistance behavior. The 3.75 mm diameter implant showed better performance than the 5 mm diameter implant with a higher normalized load, but under absolute load magnitudes, the 3.75 mm diameter implants exhibited worse performance than the 5 mm diameter implants. Using the magnitude of the applied forces and the number of cycles a person applies per day, the fatigue test could predict the life of the implants [21].

A normalized load was used to compare the performance of the three diameters of implants during fatigue testing. The study simulated the maximum load force that full-dentition adults can apply to adult teeth, which ranges from 510 N to 840 N, and the typical bite force magnitude by adults averages was 690 N. Regarding the difference between males and females, is sensible which the male displayed with 689 N, and the females displayed with 596 N between the premolars and molars [22, 23]. The bite

force of adult males may exhibit a greater maximum force than that of females, which implies that an implant has a higher chance of failing in a male patient [24].

When the cyclic load was applied to test these specimens, the major failure mode was defined as plastic deformation on the titanium surface. Thus, cycle accumulation caused deformation, which is consistent with previous studies [25, 26]. The average chewing cycle of a normal person could influence the fatigue life of these implants, which can withstand a component cycles without significant damage to the components. The adult individual chewing frequency is nearly 2700 times a day, which is equal to 10 million times per year; However, under normal oral conditions, chewing cycles are not consistently active; thus an implant that survives 5×10^6 cycles may be considered to have successfully completed fatigue analysis [7].

A previous study confirmed that fatigue fractures are related to the propagation of microscopic cracks in the material caused by stress concentration, material imperfections and externally applied loads [27]. An analysis of surface fracturing was established as a method of failure analysis in the field of bioengineering. During the process of a fracture, the initial cracks tend to propagate under external loading, especially during cyclic loading. Initially, the loading stress is concentrated at the tips of these cracks. The rate of loading stress has a direct influence on material fracturing that is not obvious, and the velocity of crack propagation is slow. As repeated loading continues, the velocity of crack propagation increases faster until the concentrated stress surpasses the material's fracture limits. When the performance of the three different implant diameters was compared, we found that inconsistent fatigue in the 3.3 mm diameter implant was most likely responsible for the results of previous studies [28, 29]. During fatigue tests, it has been reported that the failure probability in wider diameter implants is reduced by increasing the diameter of the implant, which is related to the stress distribution that occurs at the junction of the implant collar and the beginning of the thread [30].

In this test, the simulated oral environment influenced the fatigue strength of these implant samples, which leads the fixture fractures was can be found some studies have implied that these results are attributable to the corrosive environment in the body relative to normal conditions [31], in which the surface of the implant is immersed in ions and exposed to repeated changes of pH values, which results in a corrosive fatigue mechanism [32]. Due to the formation of corrosion pits on the surface of implant specimens, the fatigue life and mechanical strength are decreased by the corrosive environment that exists during the crack growth process on the implant surface.

Conclusion

Within the limitations of this in vitro experiment, the following conclusions can be drawn:

1) The narrow diameter implants showed the greatest risk of fatigue failure, while the normal and wider diameter implants showed comparable and classic fatigue behavior. 2) The fatigue limit of all of the implant specimens immersed in a simulated oral environment was lowered by 20% compared to that under normal conditions. The simulated oral physiological environment influenced the fatigue strength by producing a corrosive environment that affected the fatigue mechanism.

Acknowledgements

The author acknowledge the support by grants from the Ministry of Education of the People's Republic of China (20120181120007).

Disclosure of conflict of interest

None.

Address correspondence to: Dr. Zhuoli Zhu, State Key Laboratory of Oral Diseases, West China Hospital of Stomatology, Sichuan University, Chengdu 610065, Sichuan, China. Tel: +86-13981751199; E-mail: zzl7507@scu.edu.cn

References

[1] Jemt T and Lekholm U. Measurements of buccal tissue volumes at single-implant restorations after local bone grafting in maxillas: a 3-year clinical prospective study case series. Clin Implant Dent Relat Res 2003; 5: 63-70.

[2] Adell R, Lekholm U, Grondahl K, Branemark PI, Lindstrom J and Jacobsson M. Reconstruction of severely resorbed edentulous maxillae using osseointegrated fixtures in immediate au-

togenous bone grafts. Int J Oral Maxillofac Implants 1990; 5: 233-246.
[3] Jemt T, Lekholm U and Adell R. [Osseointegrated implants in treatment of patients with missing teeth--preliminary study of 876 implants]. Quintessenz 1990; 41: 1935-1946.
[4] van Steenberghe D, Lekholm U, Bolender C, Folmer T, Henry P, Herrmann I, Higuchi K, Laney W, Linden U and Astrand P. Applicability of osseointegrated oral implants in the rehabilitation of partial edentulism: a prospective multicenter study on 558 fixtures. Int J Oral Maxillofac Implants 1990; 5: 272-281.
[5] Branemark PI, Hansson BO, Adell R, Breine U, Lindstrom J, Hallen O and Ohman A. Osseointegrated implants in the treatment of the edentulous jaw. Experience from a 10-year period. Scand J Plast Reconstr Surg Suppl 1977; 16: 1-132.
[6] Branemark PI, Adell R, Breine U, Hansson BO, Lindstrom J and Ohlsson A. Intra-osseous anchorage of dental prostheses. I. Experimental studies. Scand J Plast Reconstr Surg 1969; 3: 81-100.
[7] Simonis P, Dufour T and Tenenbaum H. Long-term implant survival and success: a 10-16-year follow-up of non-submerged dental implants. Clin Oral Implants Res 2010; 21: 772-777.
[8] Langer B, Langer L, Herrmann I and Jorneus L. The wide fixture: a solution for special bone situations and a rescue for the compromised implant. Part 1. Int J Oral Maxillofac Implants 1993; 8: 400-408.
[9] Allum SR, Tomlinson RA and Joshi R. The impact of loads on standard diameter, small diameter and mini implants: a comparative laboratory study. Clin Oral Implants Res 2008; 19: 553-559.
[10] Fissore B, Nicholls JI and Yuodelis RA. Load fatigue of teeth restored by a dentin bonding agent and a posterior composite resin. J Prosthet Dent 1991; 65: 80-85.
[11] Bahat O and Handelsman M. Use of wide implants and double implants in the posterior jaw: a clinical report. Int J Oral Maxillofac Implants 1996; 11: 379-386.
[12] Ivanoff CJ, Grondahl K, Sennerby L, Bergstrom C and Lekholm U. Influence of variations in implant diameters: a 3- to 5-year retrospective clinical report. Int J Oral Maxillofac Implants 1999; 14: 173-180.
[13] Junge T, Nicholls JI, Phillips KM and Libman WJ. Load fatigue of compromised teeth: a comparison of 3 luting cements. Int J Prosthodont 1998; 11: 558-564.
[14] Hsu YB, Nicholls JI, Phillips KM and Libman WJ. Effect of core bonding on fatigue failure of compromised teeth. Int J Prosthodont 2002; 15: 175-178.
[15] Ganesan G, Sankararamasubramanian HM, Narayanan JM, Sivaprakash KR and Parida A. Transcript level characterization of a cDNA encoding stress regulated NAC transcription factor in the mangrove plant Avicennia marina. Plant Physiol Biochem 2008; 46: 928-934.
[16] Long M and Rack HJ. Titanium alloys in total joint replacement--a materials science perspective. Biomaterials 1998; 19: 1621-1639.
[17] Esposito M, Hirsch JM, Lekholm U and Thomsen P. Biological factors contributing to failures of osseointegrated oral implants. (I). Success criteria and epidemiology. Eur J Oral Sci 1998; 106: 527-551.
[18] Vigolo P, Givani A, Majzoub Z and Cordioli G. Clinical evaluation of small-diameter implants in single-tooth and multiple-implant restorations: a 7-year retrospective study. Int J Oral Maxillofac Implants 2004; 19: 703-709.
[19] Wiskott HW, Nicholls JI and Belser UC. Fatigue resistance of soldered joints: a methodological study. Dent Mater 1994; 10: 215-220.
[20] Wiskott HW, Nicholls JI and Belser UC. The relationship between abutment taper and resistance of cemented crowns to dynamic loading. Int J Prosthodont 1996; 9: 117-139.
[21] Morgan MJ, James DF and Pilliar RM. Fractures of the fixture component of an osseointegrated implant. Int J Oral Maxillofac Implants 1993; 8: 409-414.
[22] Jemt T, Laney WR, Harris D, Henry PJ, Krogh PH Jr, Polizzi G, Zarb GA and Herrmann I. Osseointegrated implants for single tooth replacement: a 1-year report from a multicenter prospective study. Int J Oral Maxillofac Implants 1991; 6: 29-36.
[23] Laney WR, Jemt T, Harris D, Henry PJ, Krogh PH, Polizzi G, Zarb GA and Herrmann I. Osseointegrated implants for single-tooth replacement: progress report from a multicenter prospective study after 3 years. Int J Oral Maxillofac Implants 1994; 9: 49-54.
[24] Kinni ME, Hokama SN and Caputo AA. Force transfer by osseointegration implant devices. Int J Oral Maxillofac Implants 1987; 2: 11-14.
[25] Khraisat A, Hashimoto A, Nomura S and Miyakawa O. Effect of lateral cyclic loading on abutment screw loosening of an external hexagon implant system. J Prosthet Dent 2004; 91: 326-334.
[26] Llobell A, Nicholls JI, Kois JC and Daly CH. Fatigue life of porcelain repair systems. Int J Prosthodont 1992; 5: 205-213.
[27] Gealh WC, Mazzo V, Barbi F and Camarini ET. Osseointegrated implant fracture: causes and treatment. J Oral Implantol 2011; 37: 499-503.

[28] Zinsli B, Sagesser T, Mericske E and Mericske-Stern R. Clinical evaluation of small-diameter ITI implants: a prospective study. Int J Oral Maxillofac Implants 2004; 19: 92-99.
[29] Eckert SE, Meraw SJ, Cal E and Ow RK. Analysis of incidence and associated factors with fractured implants: a retrospective study. Int J Oral Maxillofac Implants 2000; 15: 662-667.
[30] Brown SA, Flemming CA, Kawalec JS, Placko HE, Vassaux C, Merritt K, Payer JH and Kraay MJ. Fretting corrosion accelerates crevice corrosion of modular hip tapers. J Appl Biomater 1995; 6: 19-26.
[31] Huang HM, Tsai CM, Chang CC, Lin CT and Lee SY. Evaluation of loading conditions on fatigue-failed implants by fracture surface analysis. Int J Oral Maxillofac Implants 2005; 20: 854-859.
[32] Piattelli A, Scarano A, Paolantonio M, Assenza B, Leghissa GC, Di Bonaventura G, Catamo G and Piccolomini R. Fluids and microbial penetration in the internal part of cement-retained versus screw-retained implant-abutment connections. J Periodontol 2001; 72: 1146-1150.